Item-No. 2-00302 (RDG MO-240 Standard) **2-00304 (RDG MO-240 High Performance)**	**Item-No. 2-00298 (RDG MO-180 Standard)** **2-00300 (RDG MO-180 High Performance)**
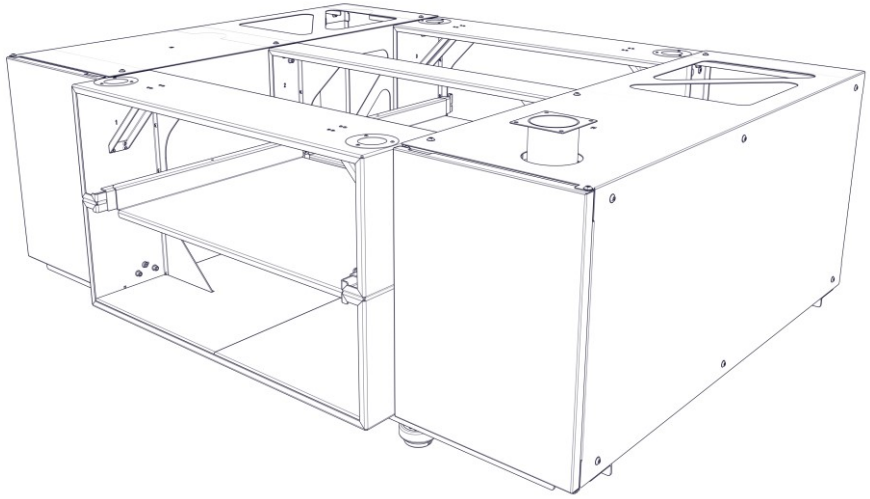	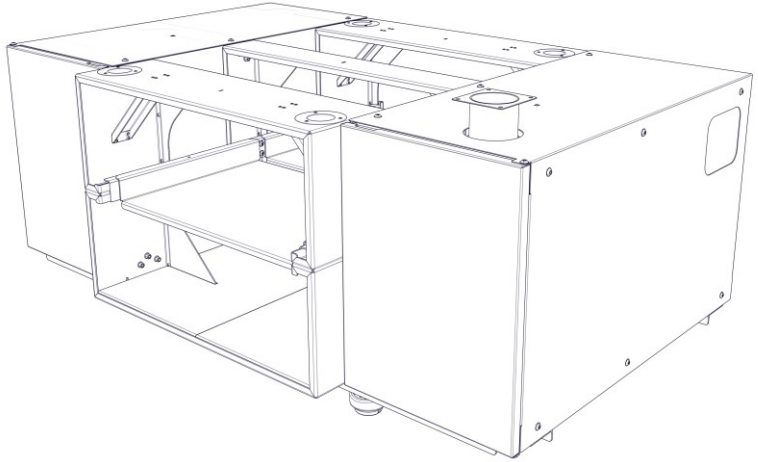

NOTICE:

The mounting material is identical for both variants!

	**Nr. /- no.**	**Bezeichnung / Inhalt**	**Designation / Contents**
	D	Beutel “D” 24x Schraube M6x16 28x Sperrzahnmutter M6	Bag “D” 24x screw M6x16 28x Serrated locking nut M6
	E	Beutel “E” 10x Linsenkopfschrauben M6x12 8x M4 U-Scheibe 4x M4 Sperrzahnscheibe 4x Einnietmutter 4x Linsenkopfschrauben M4x16 2x Lager Tür	Bag “E” 10x Screw flattened half round head M6x12 8x M4 washer 4x lock washer M4 4x rivet nut 4x Screw flattened half round head M4x16 2x door holder

	**Nr. /- no.**	**Bezeichnung / Inhalt**	**Designation / Contents**
	F	Beutel “F” - Ersatzteile 2x Schraube M6x16 2x Sperrzahnmutter M6 1x Linsenkopfschrauben M6x12 1x Linsenkopfschrauben M4x16 2x M4 U-Scheibe 2x M4 Sperrzahnscheibe	Bag “F” – spare parts 2x screw M6x16 2x Serrated locking nut M6 1x Screw flattened half round head M6x12 1x Screw flattened half round head M4x16 2x M4 washer 2x lock washer M4

		Benötigtes Werkzeug	**Necessary tools**
		2,5 mm Innensechskantschlüssel	2.5 mm Allen key
		4 mm Innensechskantschlüssel	4 mm Allen key
		5 mm Innensechskantschlüssel	5 mm Allen key
		Gabelschlüssel SW 10	Wrench 10

Packing list				
			RDG MO-240 Standard / High Performance	RDG MO-180 Standard / High Performance
Designation	**Part-bag**	**Amount**		
Middle module	**center part**	**1**	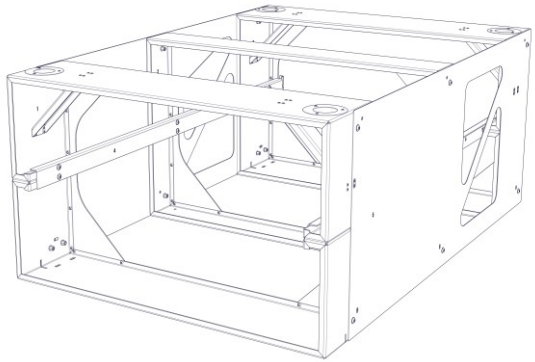	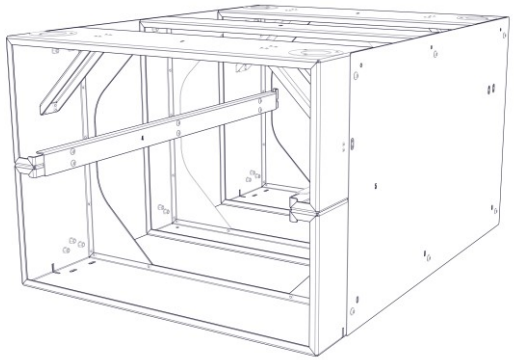
Left side module	**left side part**	**1**	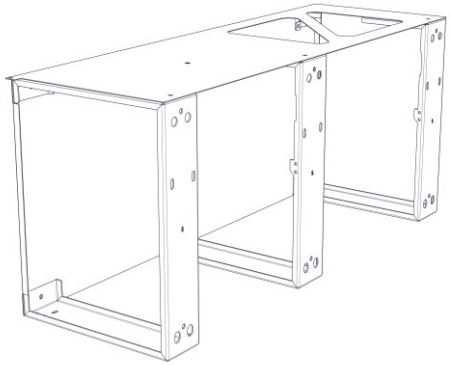	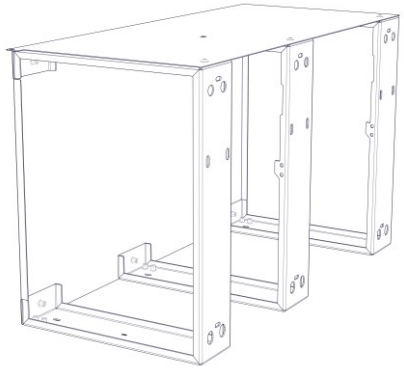

ULT AG www.ult.de ult@ult.de
Am Göpelteich 1 • D-02708 Löbau • Tel. +49 35 85 41 28-0 • Fax +49 35 85 41 28-11

Packing list				
			RDG MO-240 Standard / High Performance	RDG MO-180 Standard / High Performance
Designation	**Part-bag**	**Amount**		
Right side module	right side part	1	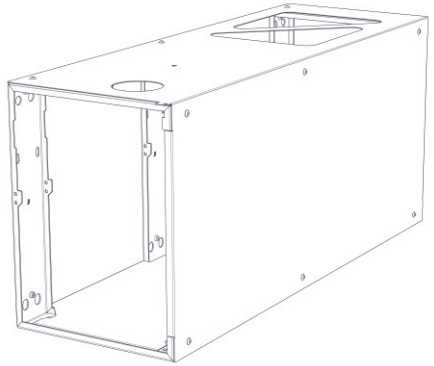	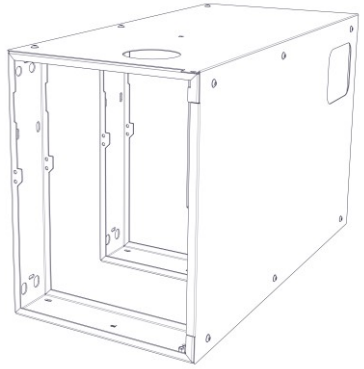
Support bracket (6)	6-A	2	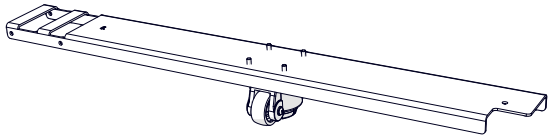	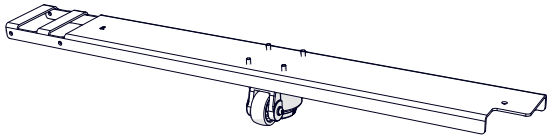
Support bracket (7)	7-A	2	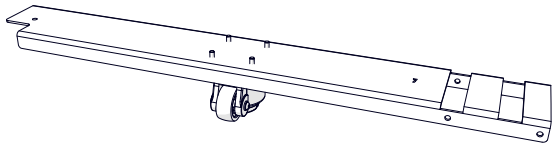	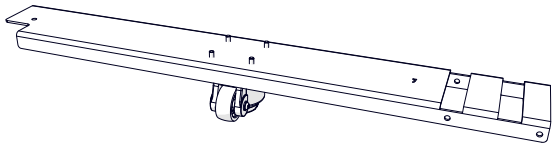

Packing list				
			RDG MO-240 Standard / High Performance	RDG MO-180 Standard / High Performance
Designation	**Part-bag**	**Amount**		
Guide rail filter module (12)	**12-E**	**1**	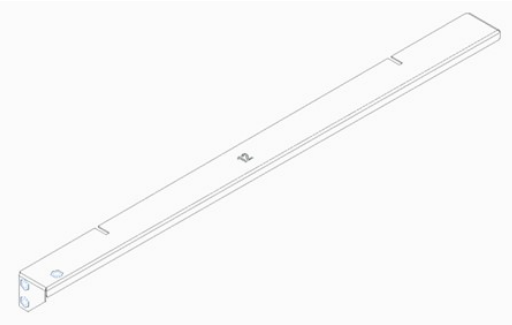	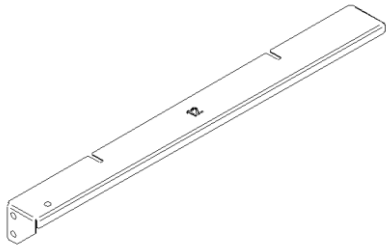
Filter unit RDG MO-240 (13)	**13-E**	**1**	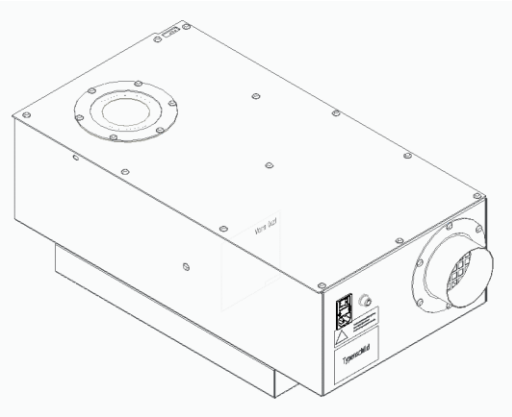	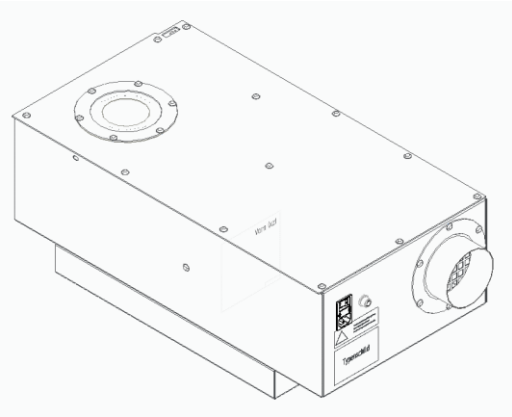

Packing list				
			RDG MO-240 Standard / High Performance	RDG MO-180 Standard / High Performance
Designation	Part-bag	Amount		
Insert plate side part (14)	14	2	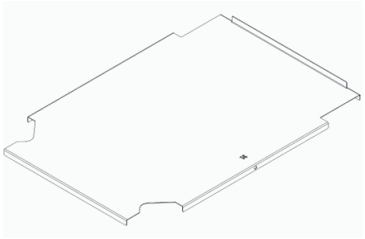	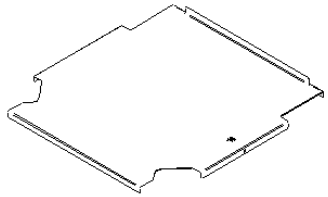
Insert plate (15)	15	1	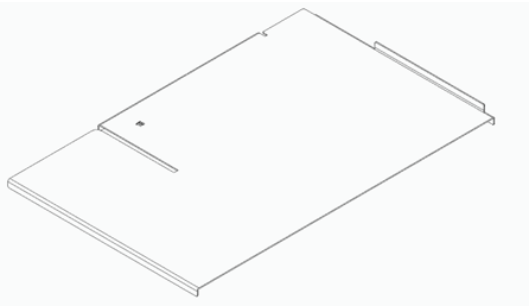	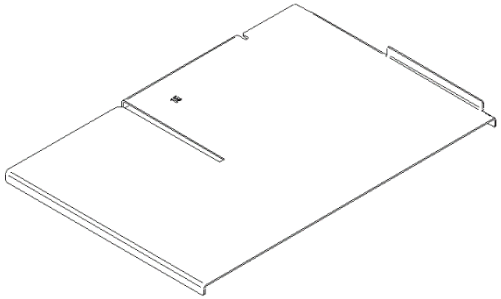

Packing list				
			RDG MO-240 Standard / High Performance	RDG MO-180 Standard / High Performance
Designation	Part-bag	Amount		
Insert plate (16)	16	1	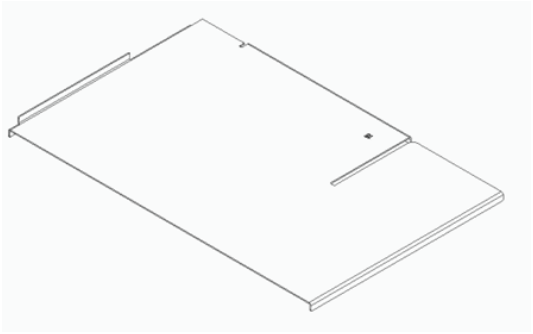	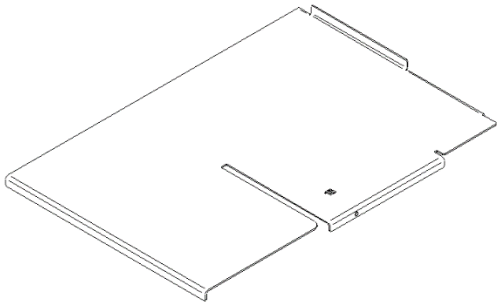
Insert plate (17)	17	2	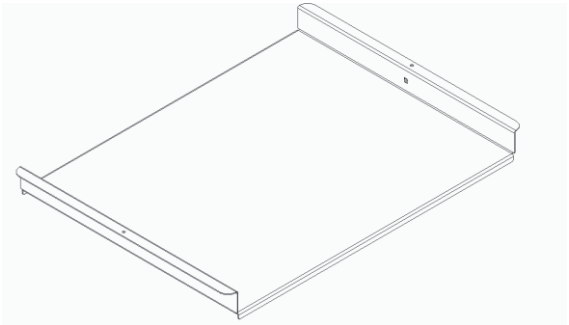	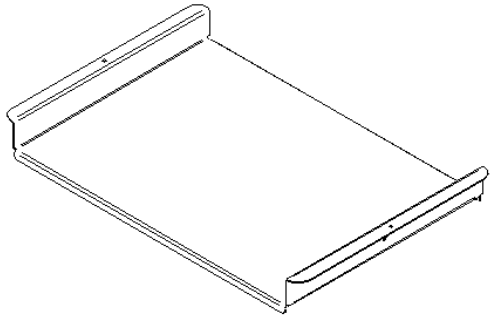

Packing list				
			RDG MO-240 Standard / High Performance	RDG MO-180 Standard / High Performance
Designation	**Part-bag**	**Amount**		
Door left	**left side**	**1**	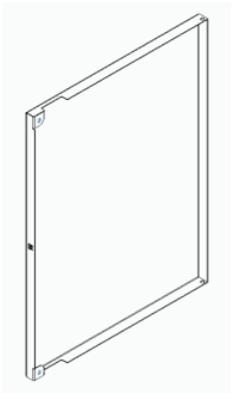	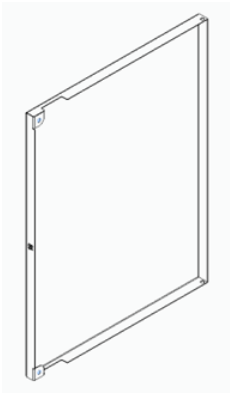
Door right	**right side**	**1**	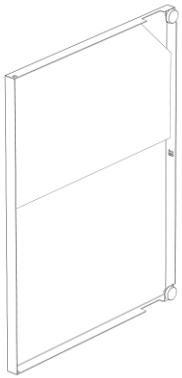	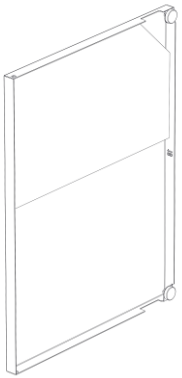

Packing list				
			RDG MO-240 Standard / High Performance	RDG MO-180 Standard / High Performance
Designation	**Part-bag**	**Amount**		
Intake nozzle(19)	**19**	**1**	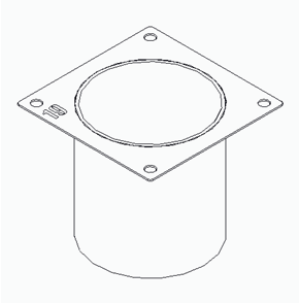	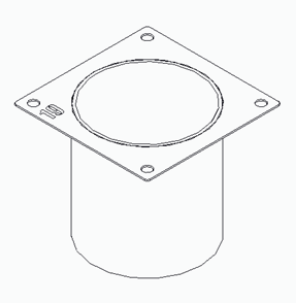
Filter bag RDG MO-180 / MO-240		**1**		

Packing list				
			RDG MO-240 Standard / High Performance	RDG MO-180 Standard / High Performance
Designation	**Part-bag**	**Amount**		
Supply cable US		**1**		
Supply cable EU		**1**		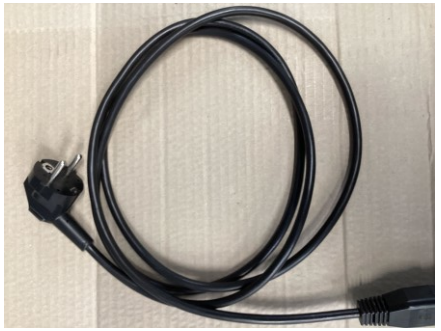

Packing list				
			RDG MO-240 Standard / High Performance	RDG MO-180 Standard / High Performance
Designation	**Part-bag**	**Amount**		
Interface cable		**1**		
pre-filter mat		**1**		

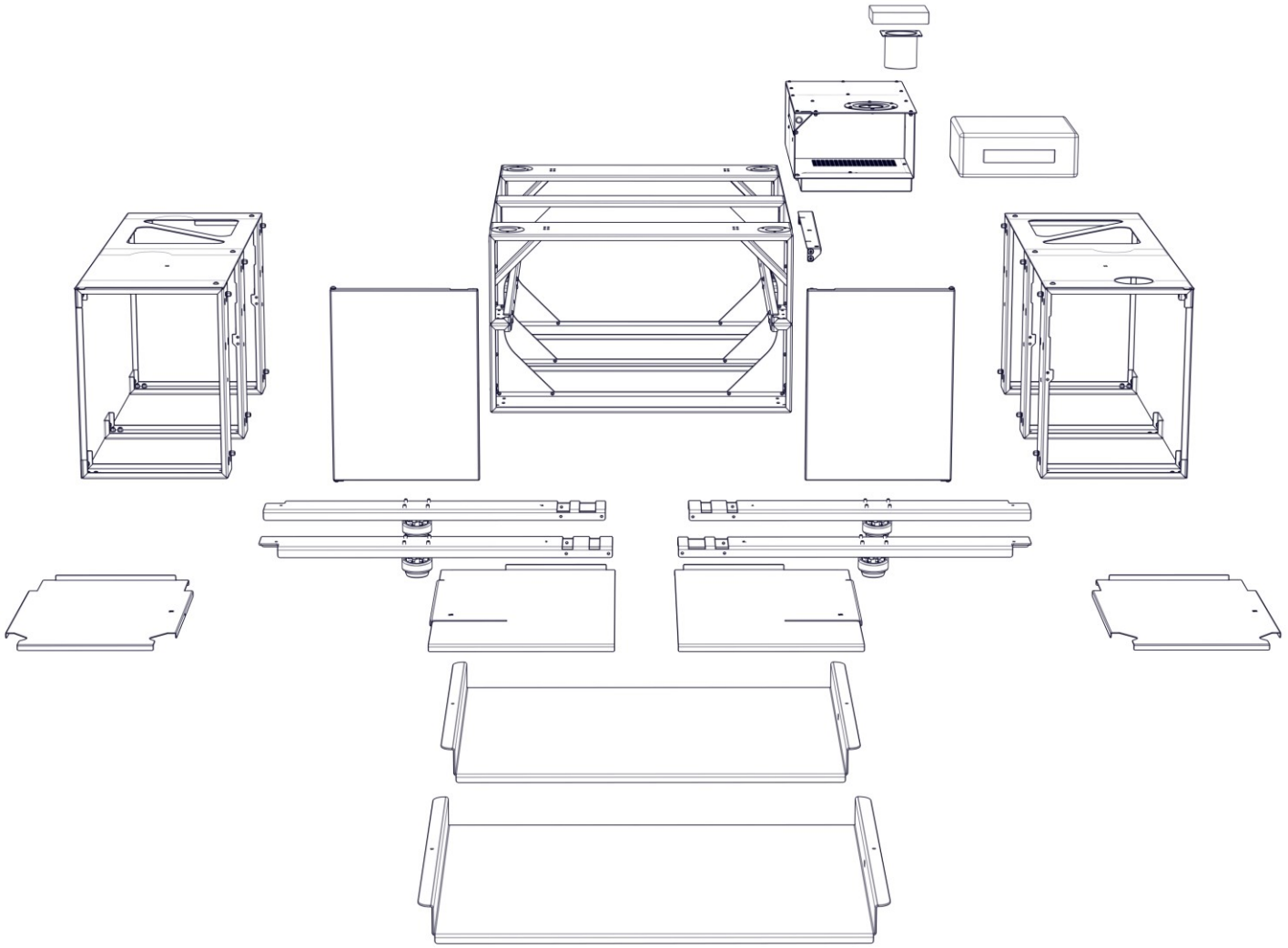

ULT AG www.ult.de ult@ult.de
Am Göpelteich 1 • D-02708 Löbau • Tel. +49 35 85 41 28-0 • Fax +49 35 85 41 28-11

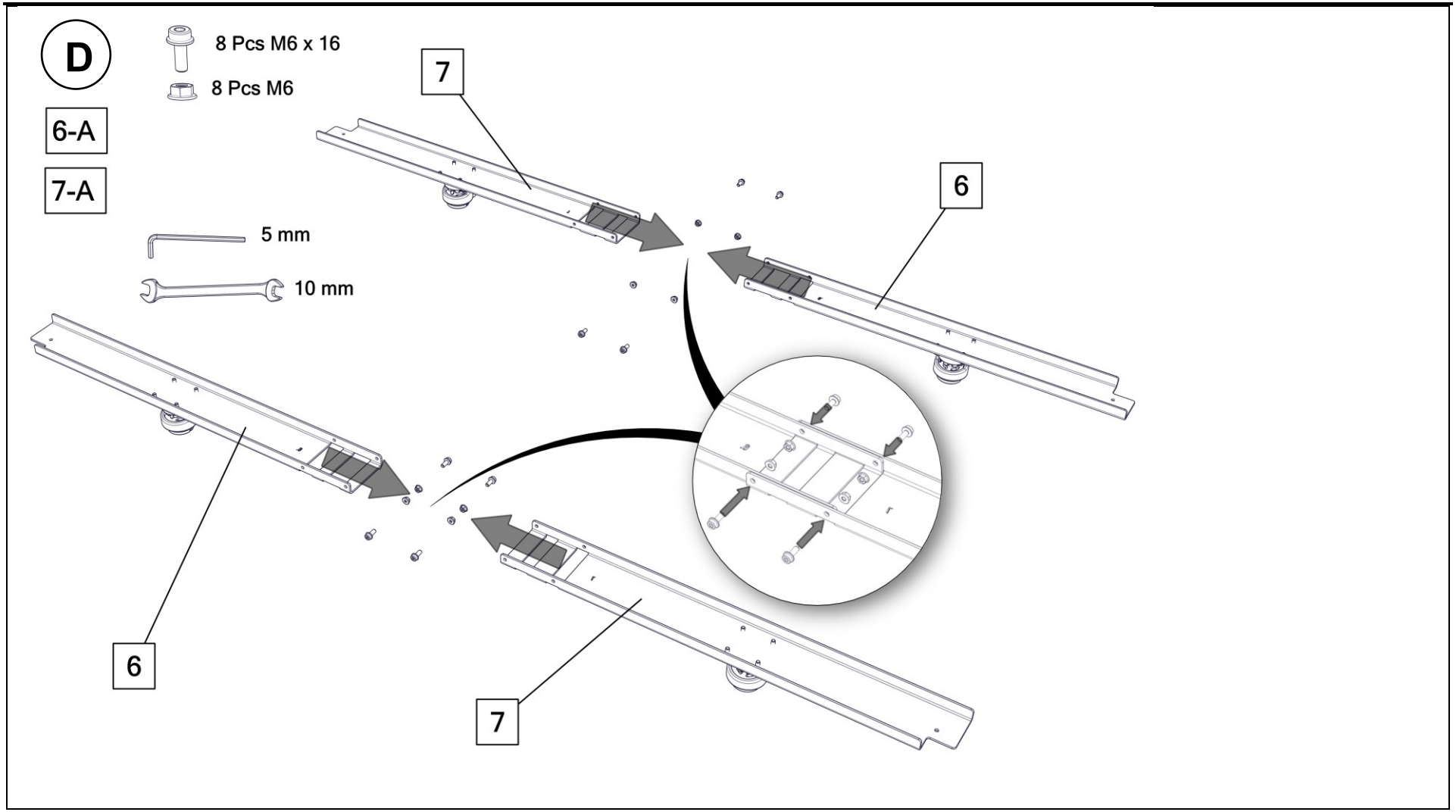
D
8 Pcs M6 x 16
8 Pcs M6
6-A
7-A
5 mm
10 mm
7
6
6
7

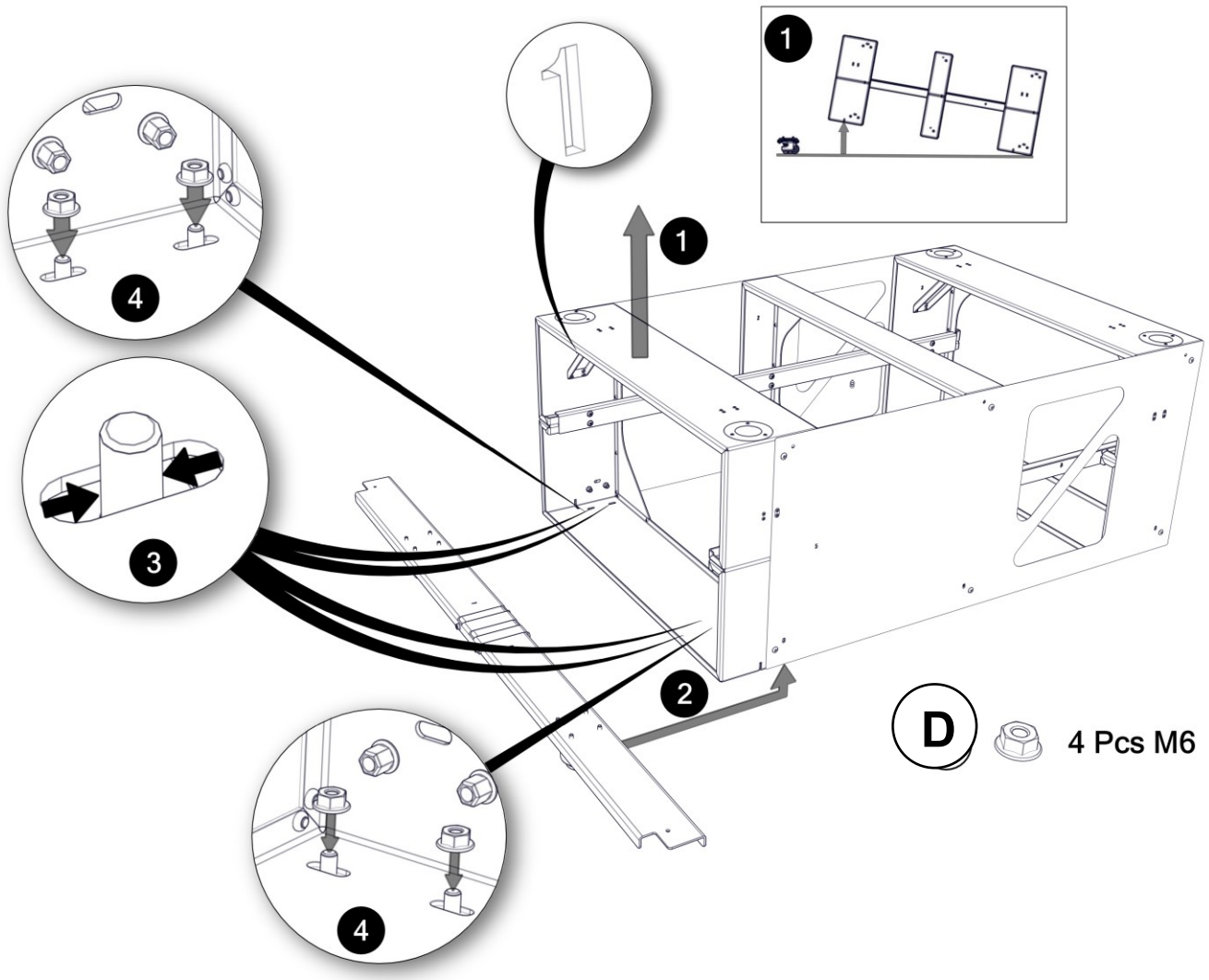

NOTE:

Fix the screw in the currently specified position as a guide. But ultimately it must be moved and adjusted according to the overall balance.

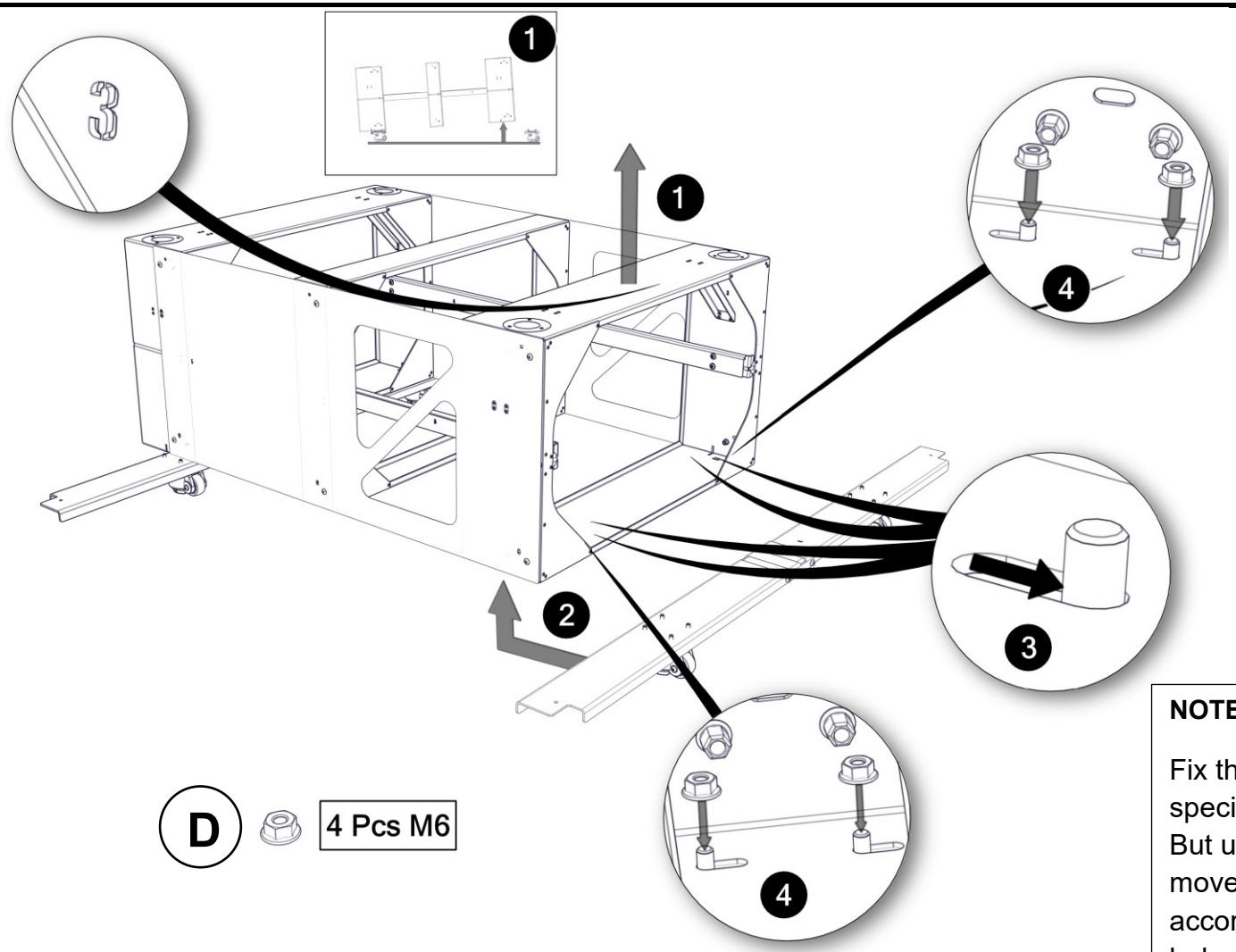

NOTE:

Fix the screw in the currently specified position as a guide. But ultimately it must be moved and adjusted according to the overall balance.

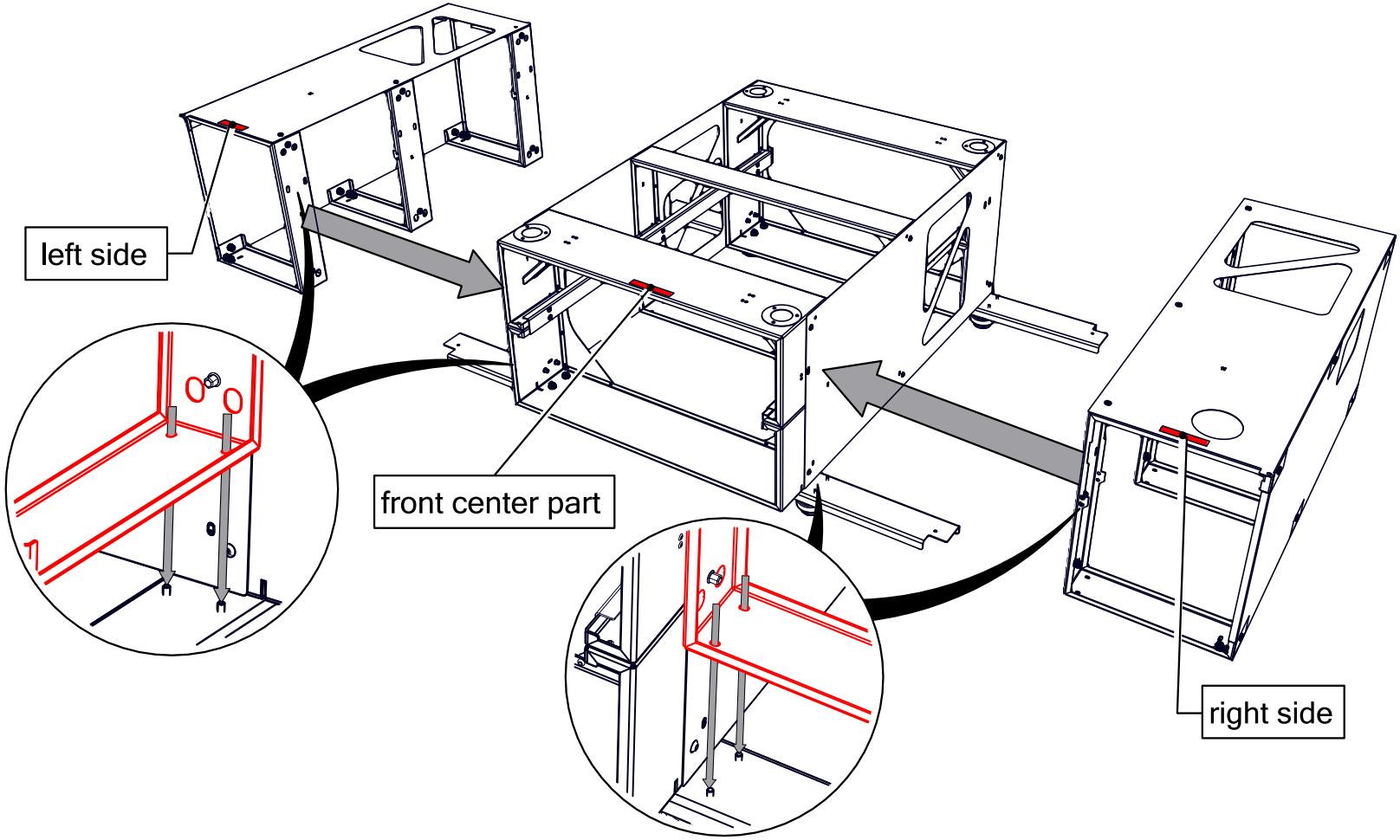

ULT AG www.ult.de ult@ult.de
Am Göpelteich 1 • D-02708 Löbau • Tel. +49 35 85 41 28-0 • Fax +49 35 85 41 28-11

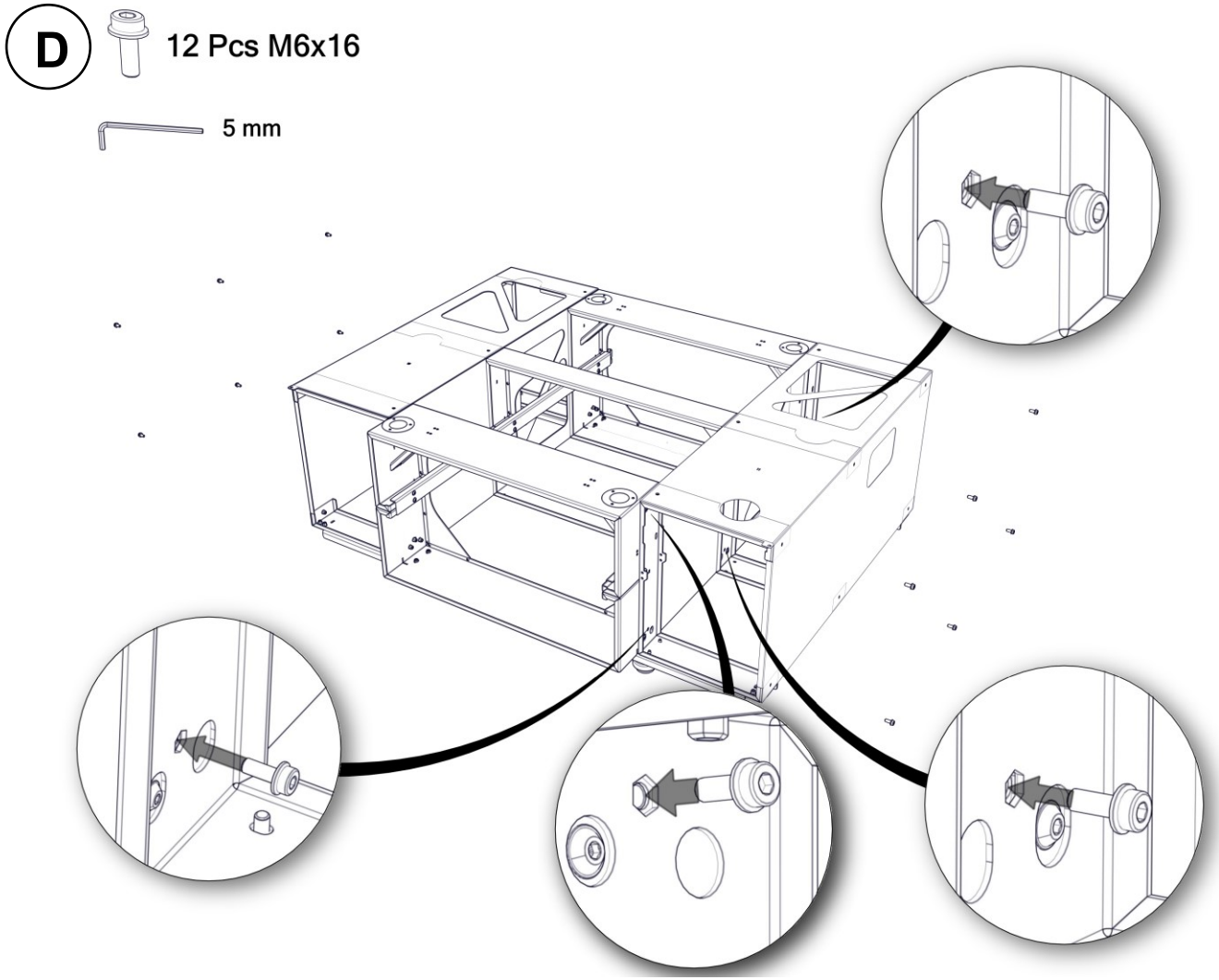
D
12 Pcs M6x16
5 mm

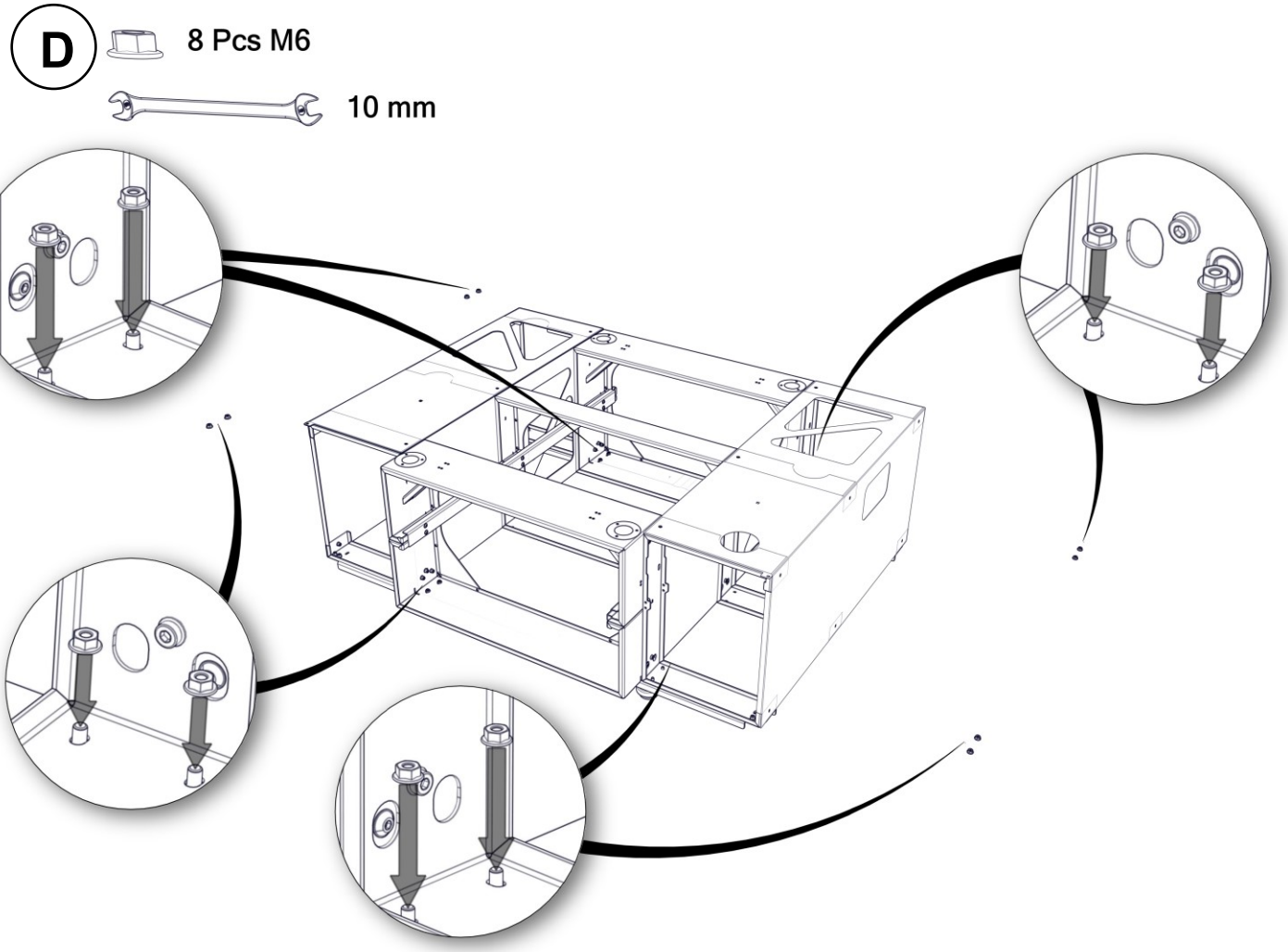
D
8 Pcs M6
10 mm

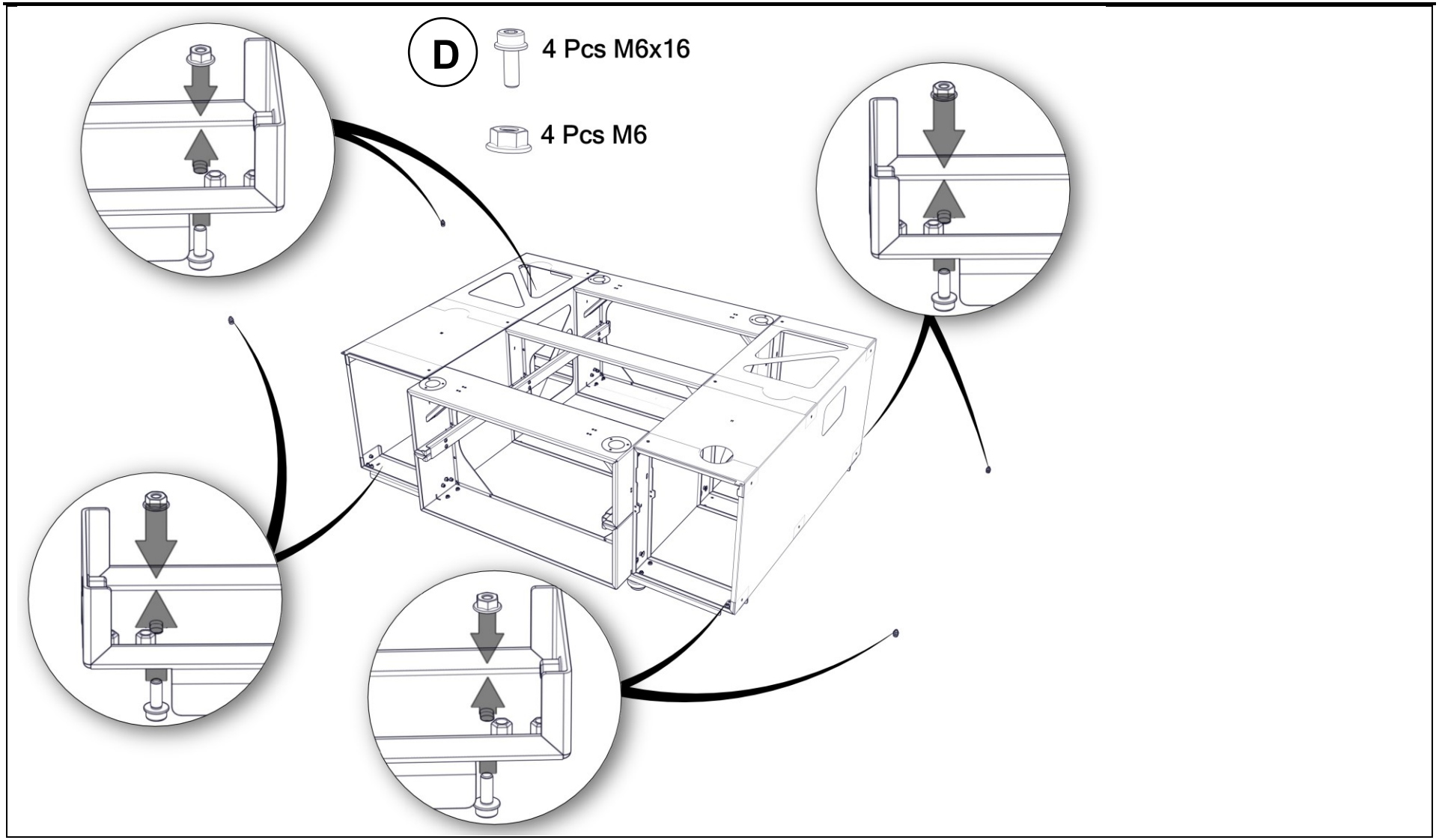
D
4 Pcs M6x16
4 Pcs M6

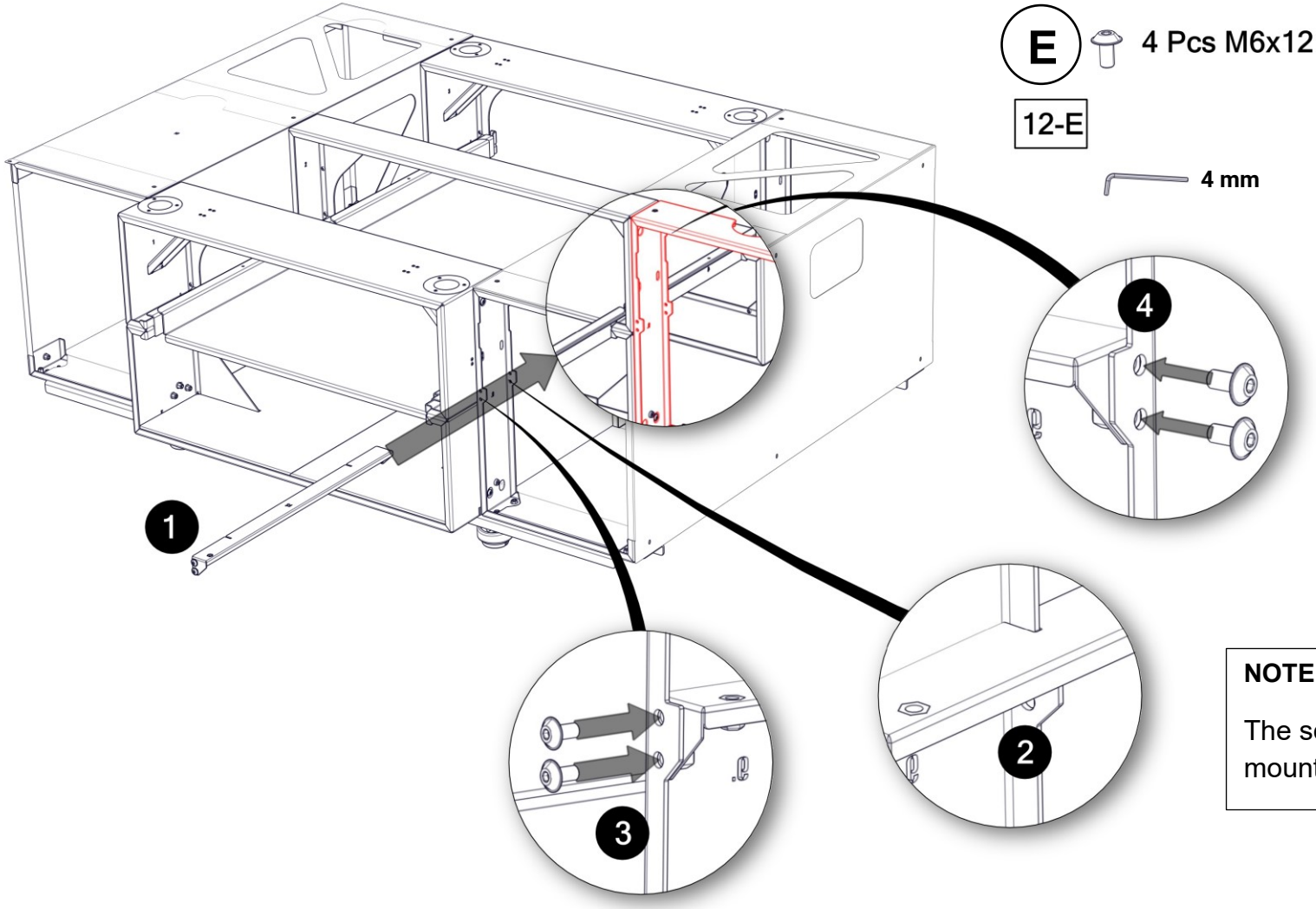

NOTE:

The screws step 4 are to be mounted from the rear.

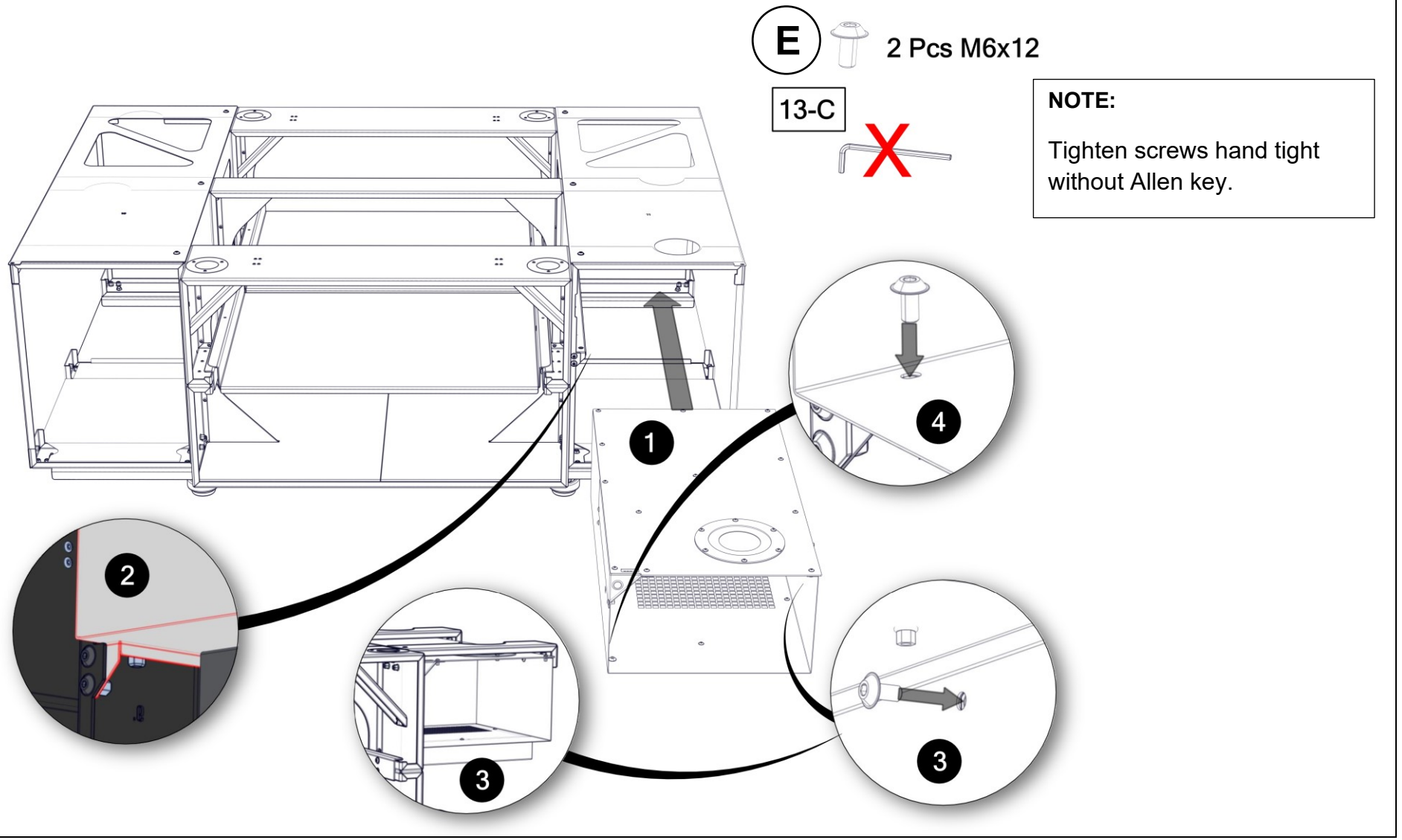
E
2 Pcs M6x12
13-C
NOTE:
Tighten screws hand tight without Allen key.
1
2
3
3
4

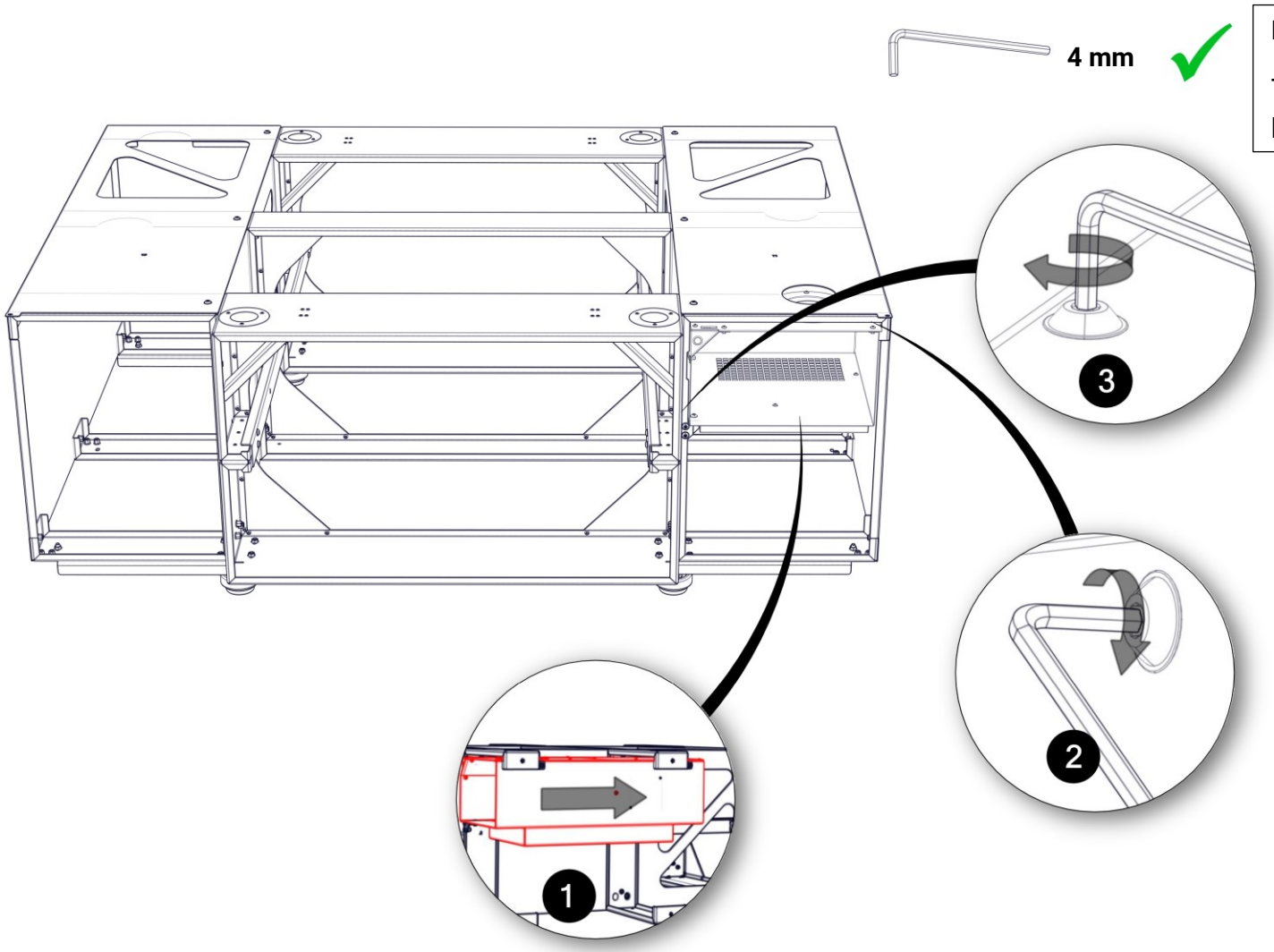

NOTE:

Tighten screws with Allen key.

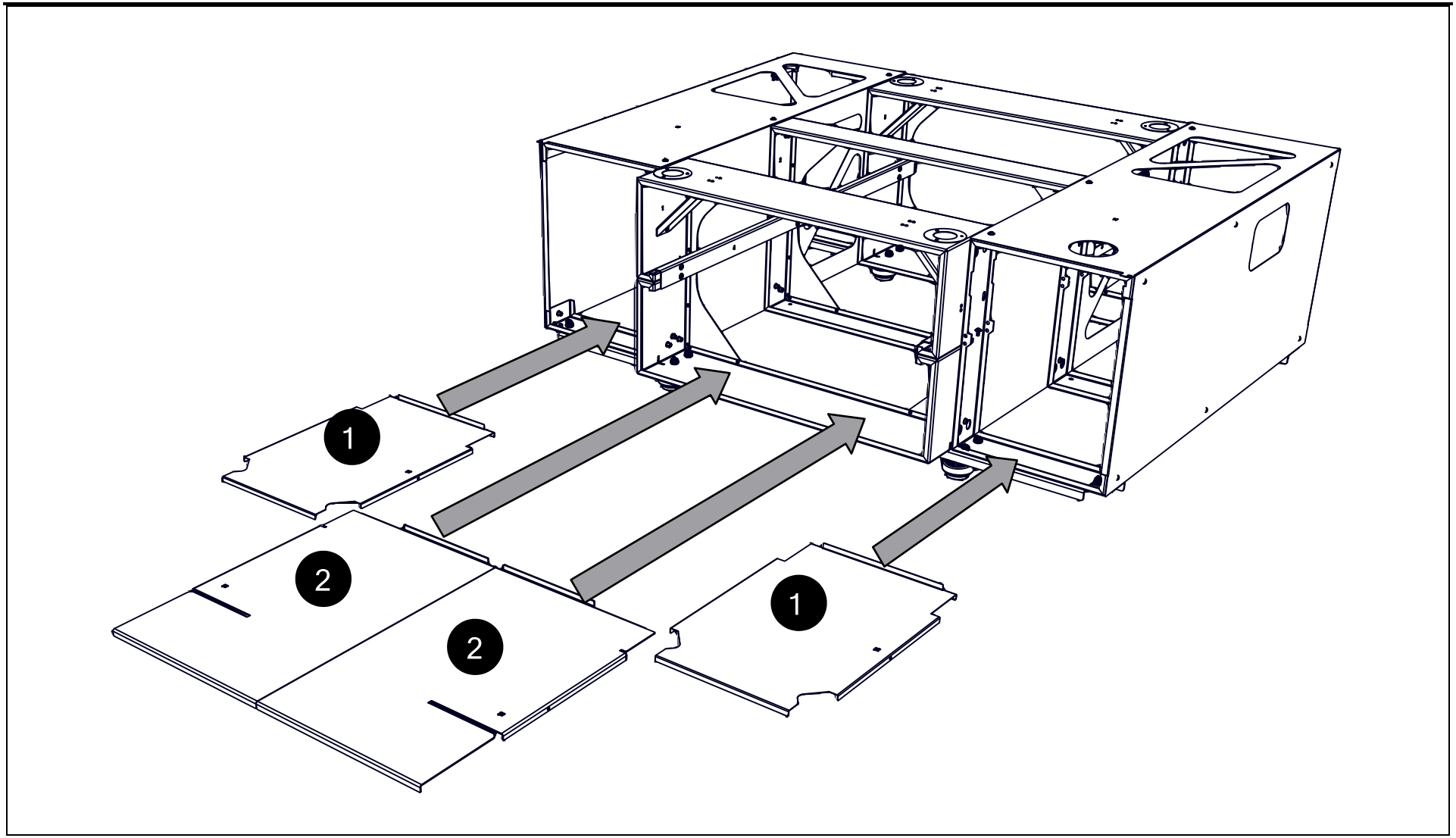
1
2
2
1

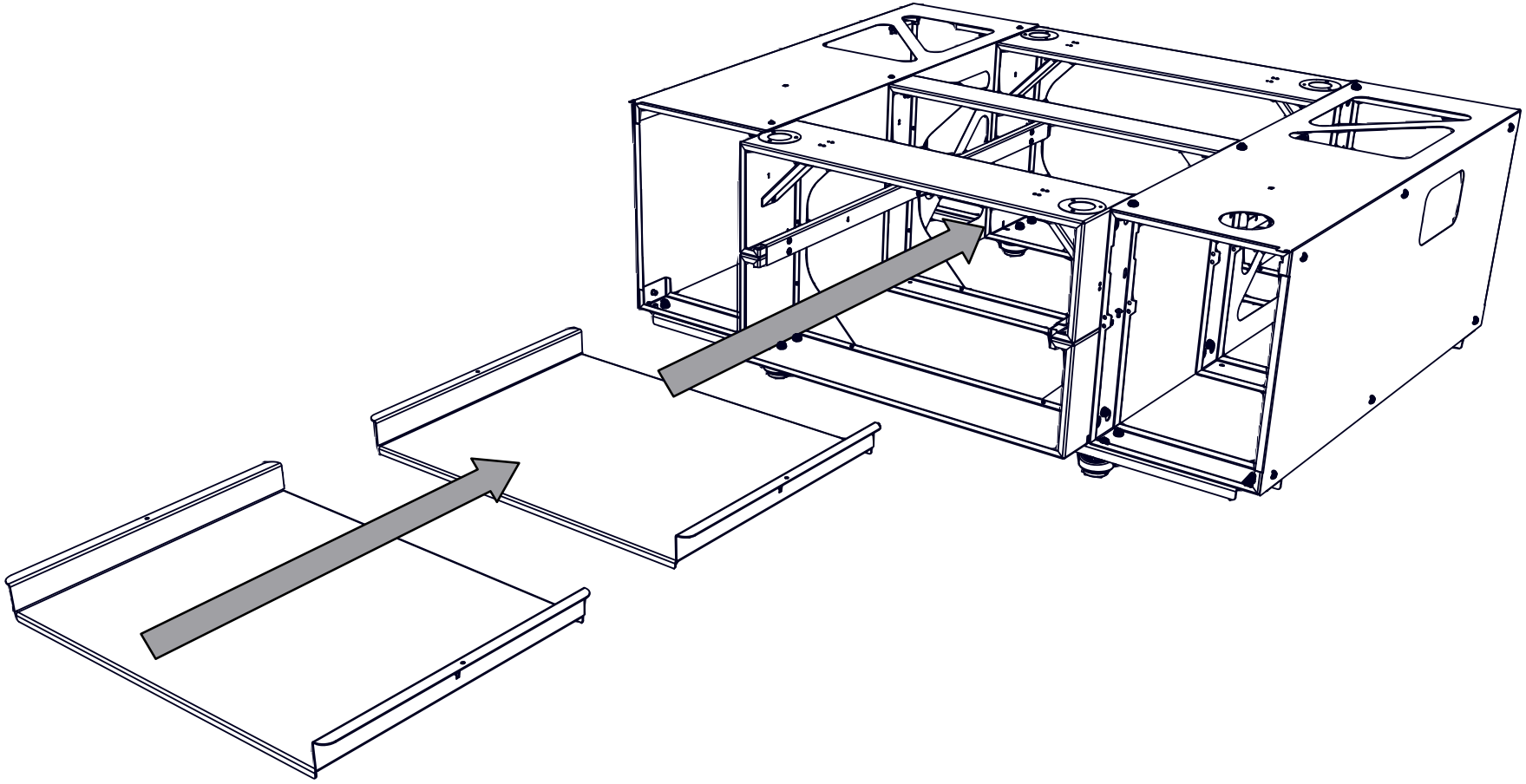

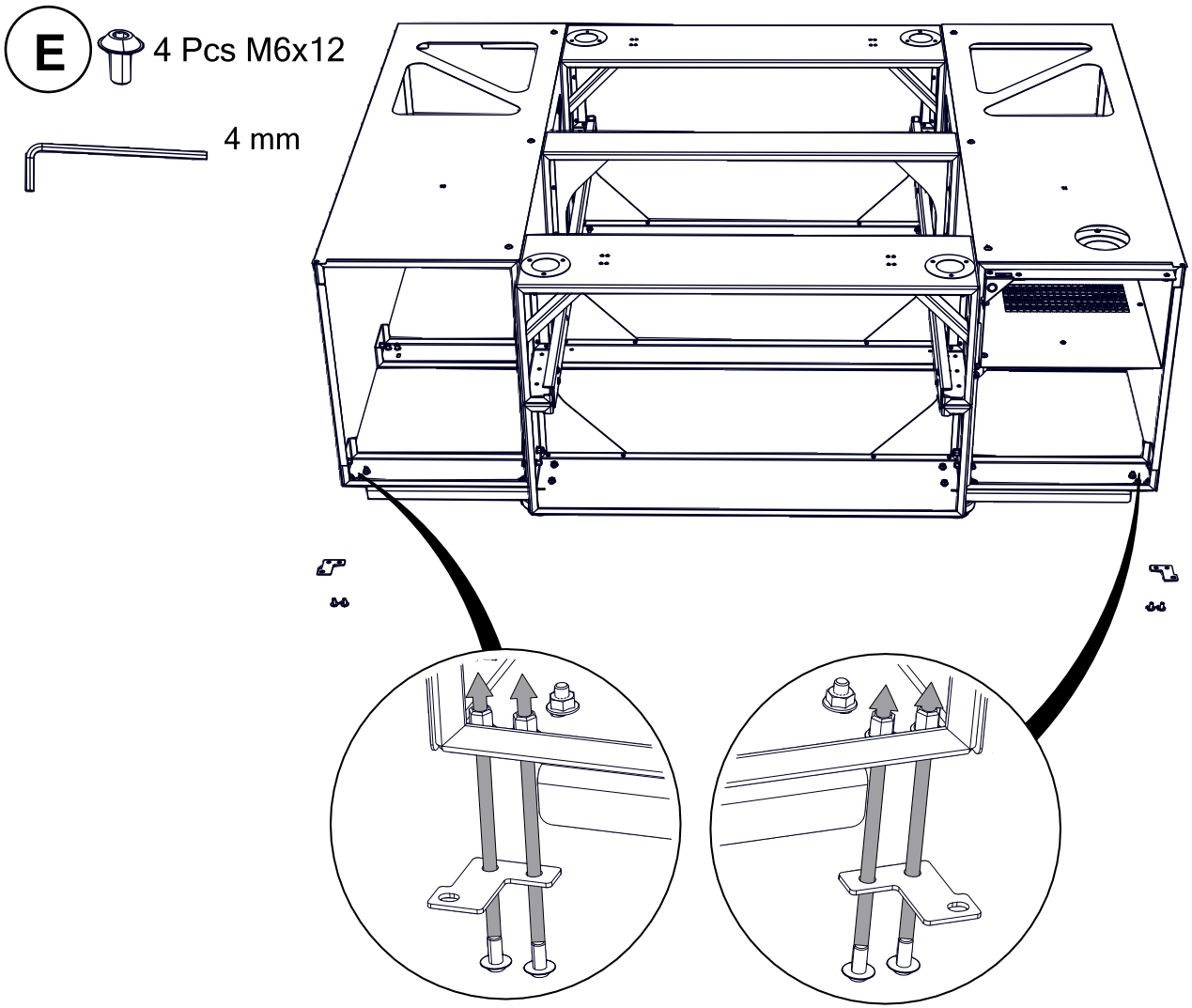

ULT AG www.ult.de ult@ult.de
Am Göpelteich 1 • D-02708 Löbau • Tel. +49 35 85 41 28-0 • Fax +49 35 85 41 28-11

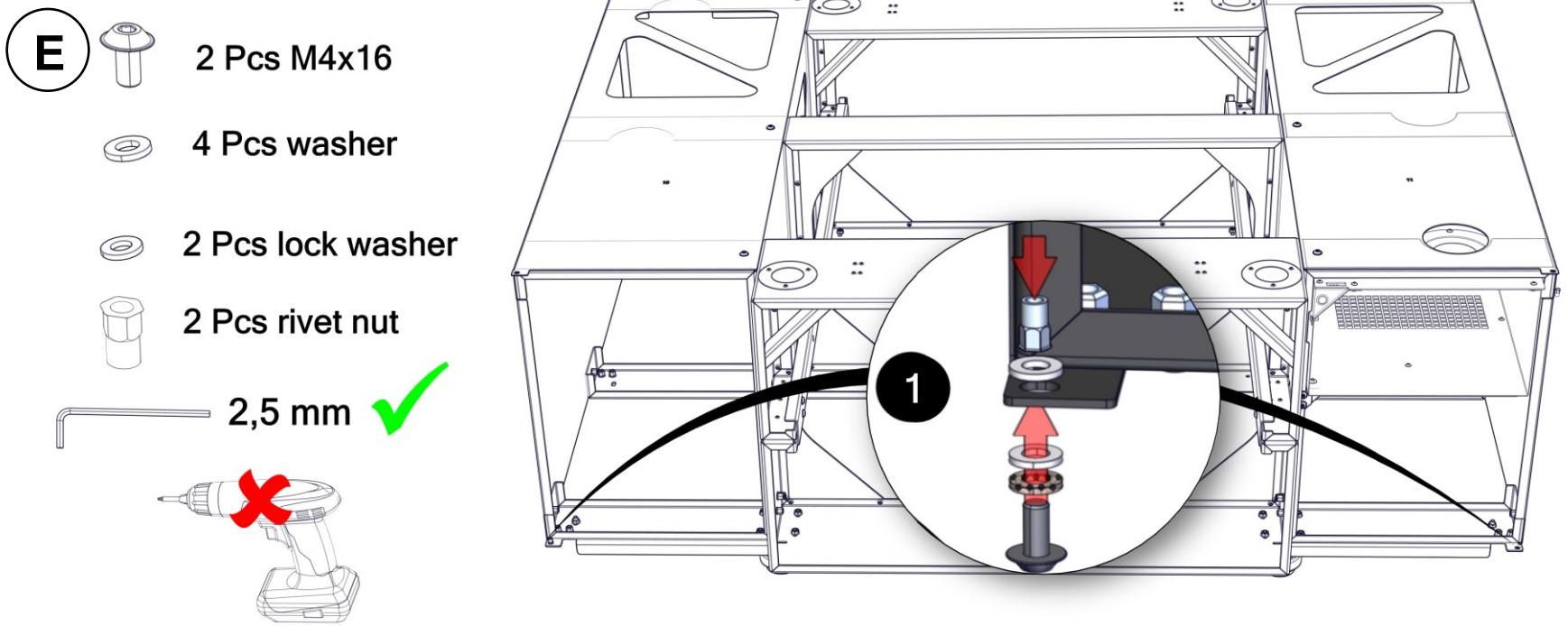
E
2 Pcs M4x16
4 Pcs washer
2 Pcs lock washer
2 Pcs rivet nut
2,5 mm
1

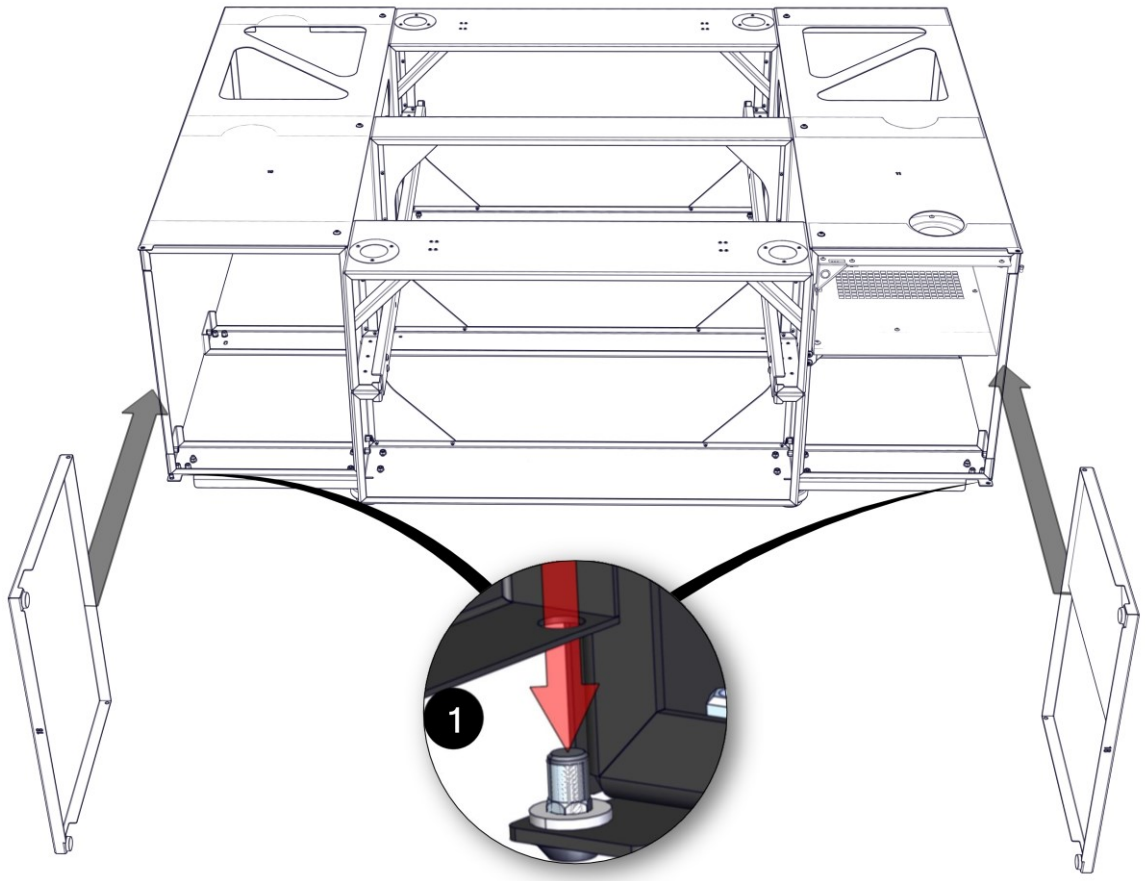
1

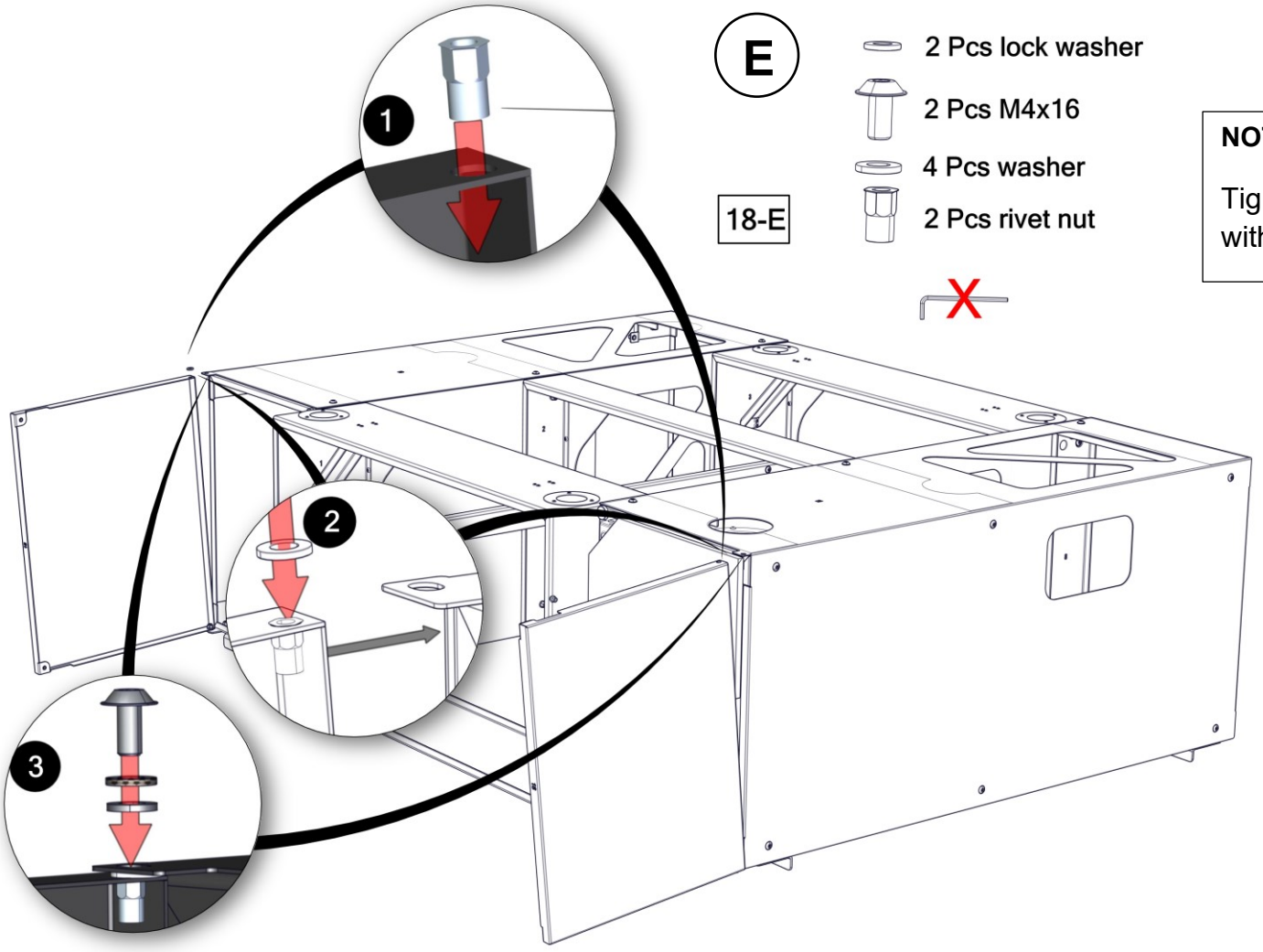

NOTE:

Tighten screws hand tight without Allen key.

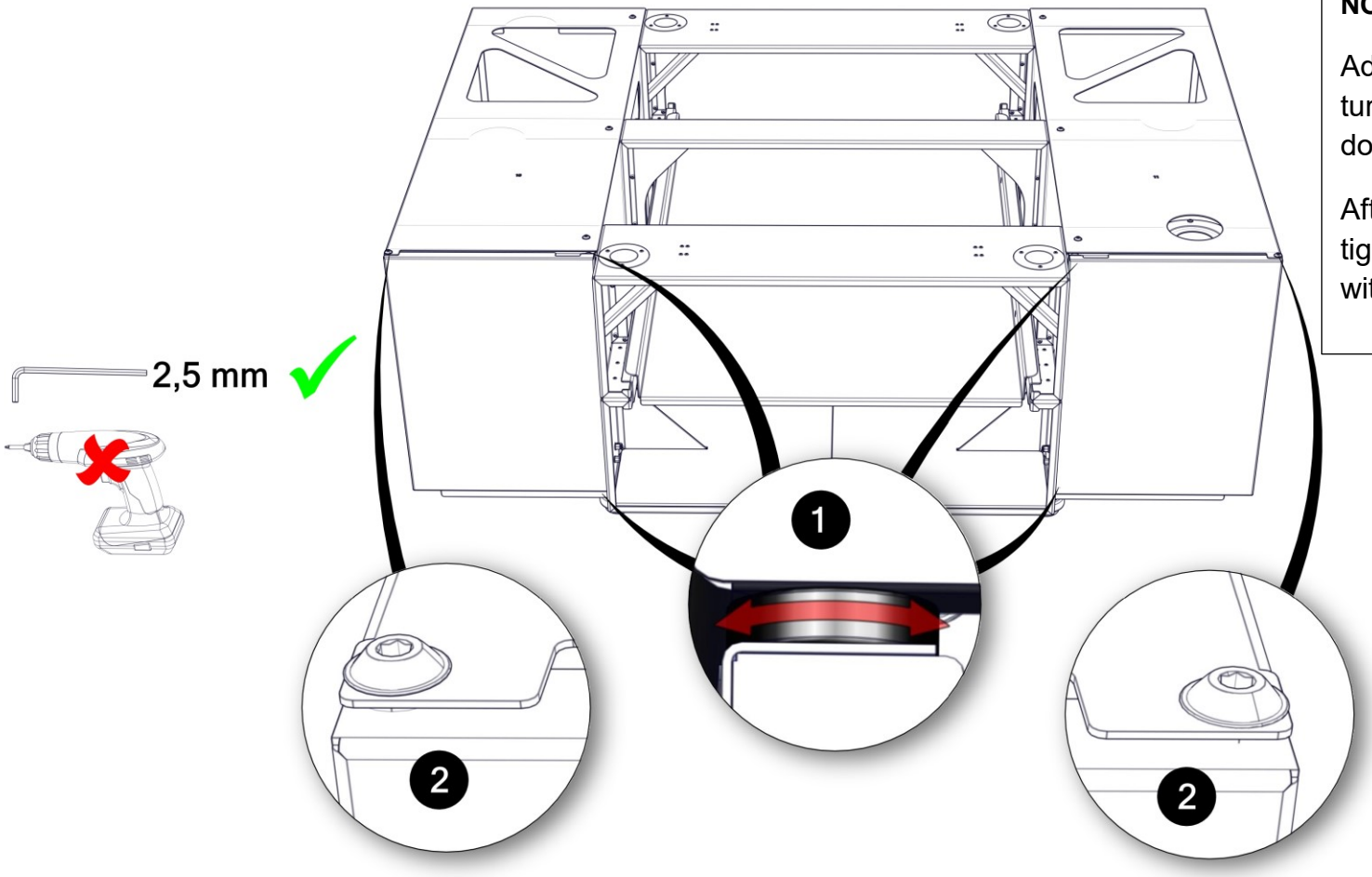

NOTE:

Adjust the magnets by turning them so that the doors close completely.

After aligning the doors, tighten the screws at the top with an Allen key.

23

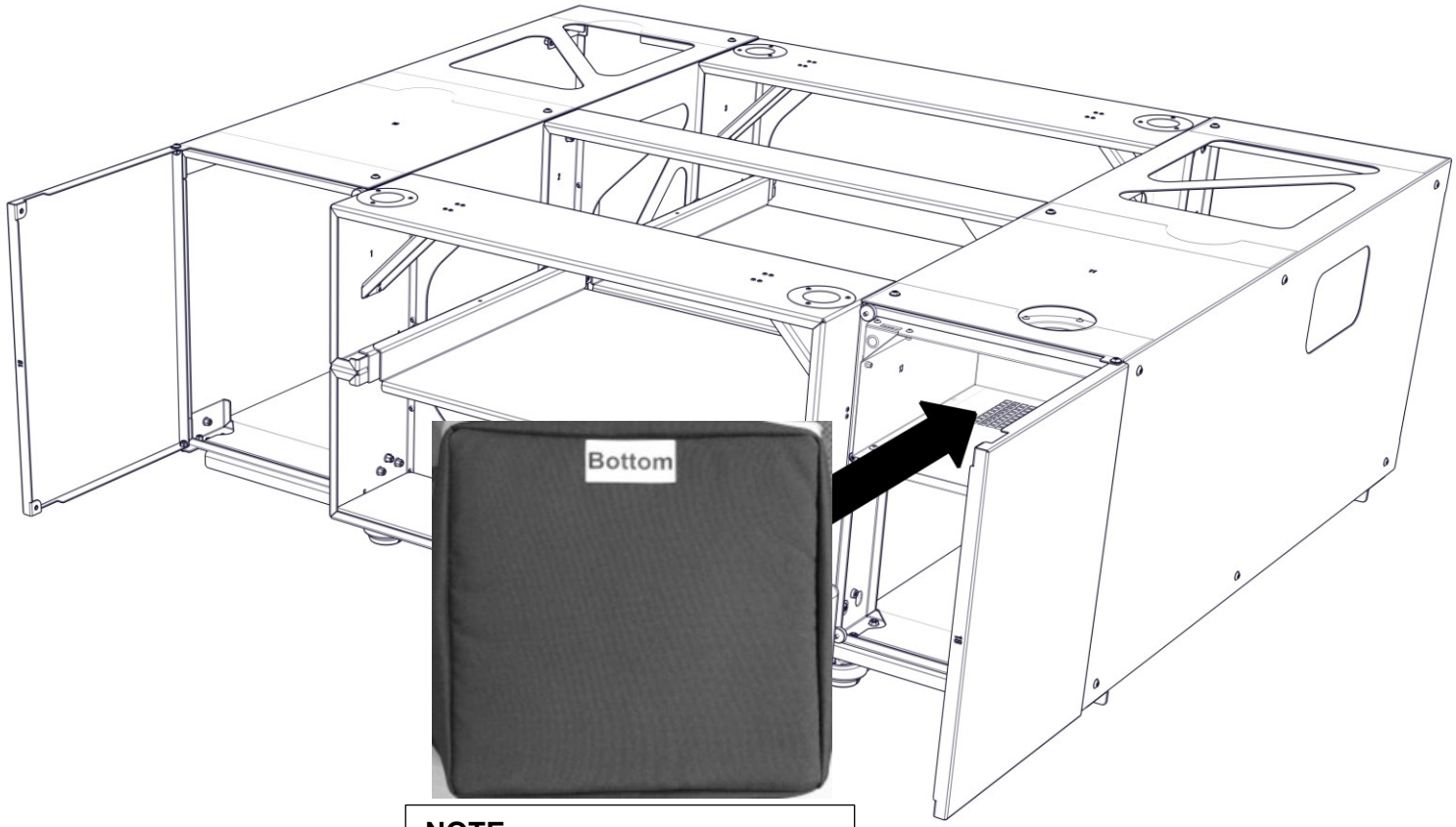

NOTE:

Make sure the label "Bottom" is facing down.

NOTE:

After the printer has been installed, the pre-filter mat must be placed on the intake nozzle.

